Soft Serve Machine

6235-C

208-230V - Gravity Feed

- Two Flavor // Countertop
- Digital Control
- Up to 350, 4oz servings per hour
- (2) 1.8 Qt Cylinder - (2) 12.7 Qt Hopper
- **Ideal for medium capacity outlets to serve ice cream, frozen yogurt, gelato or sorbet. Fully loaded with all standard options.**

Gravity Feed

The Spaceman gravity-fed machines produce consistent product quality with a solution that is easy to operate and easier to clean with less moving parts.

Patented 100% Controlled Contact Flooded Evaporator
Designed for maximum efficiency, this innovation delivers the industry's fastest freeze-down and recovery times. The result? Smaller ice crystals and the smoothest, creamiest mouthfeel.

V5 Single-Piece Auger Design
A fully integrated auger eliminates parts, reduces cleaning time and failure points in the drivetrain, ensures 100% evaporator wall contact, and enhances product consistency with the smallest ice crystals and smoothest mouthfeel in the industry.

Smart Safety Controls & Standby Mode
Independently set and control standby temperatures for the hopper and freezing cylinder, optimizing energy efficiency and product quality during non-use. Maintains product temperature in both mix hopper and freezing cylinder below 4.4ºC (40ºF) overnight.

Hopper Agitator
Maintain product consistency and prevent product separation.

Defrost for Cleaning
Increases efficiency during cleaning by heating frozen product in cylinder.

Inverter Motor Control for Enhanced Durability
Allows the use of three-phase motors with single-phase power input, reducing torque and strain by controlling start-up speed. This innovation significantly minimizes gearbox and drivetrain failures caused by operational errors or freeze-ups.

Separate Hopper Cooling Controls
Independently control and cool each hopper to maintain ideal temperatures, prevent freezing around the sides, and optimize output by pre-chilling the product before it enters the freezing cylinder.

Dual-System Gravity-Fed Air Inlet
Combined with the V5 auger, this system optimizes overrun and product consistency, delivering the best long-term texture and quality in the industry.

The Spaceman Difference

QUALITY
Superior Craftsmanship
Designed by Aerospace Engineers
- ✓ Patented Freezing Cylinder
- ✓ Built to last, attention to detail
- ✓ Microcrystal Technology

VALUE
Maximum ROI
Lower Your Cost of Ownership
- ✓ Fair up front cost
- ✓ Lower service and parts costs
- ✓ Lowest energy cost per serving

SERVICE
Best User Experience
Service on Your Terms
- ✓ Dedicated Success Team
- ⊘ No binding contracts
- ⊘ No locked-in maintenance fees

720-328-1020 / sales@spacemanusa.com / www.spacemanusa.com

SPACEMAN FORTE

/// Soft Serve Machine

6235-C

Standard 6

LISTED
SA46374

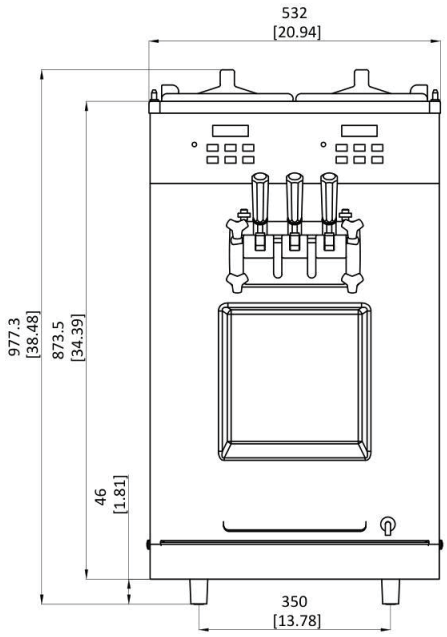

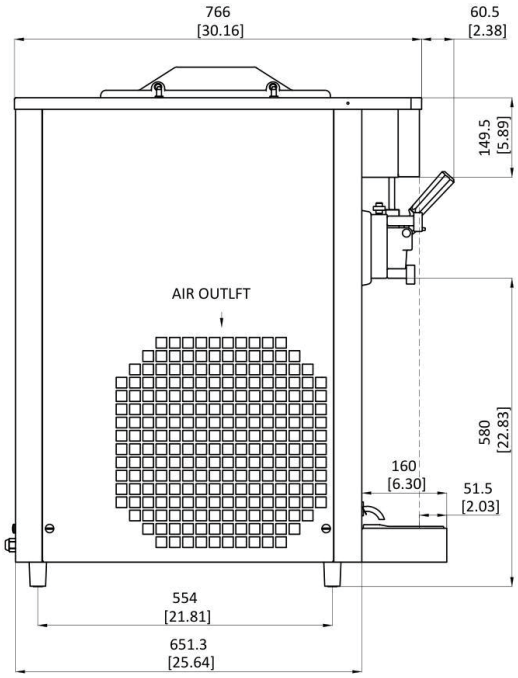

Specifications

Flavors	2 + 1
Freezing Cylinders	2 x 1.7L / 1.8 Qt
Mix Hoppers	2 x 12L / 12.7 Qt
Output Capacity (4oz servings)	350 serves/hr
Max Serving Size	8oz
Clearance Requirements	152mm/6" on left

Weight	Kg/lb (Gravity)
Net	173 / 381
Shipping	191/ 421
Volume	1 CBM / 21 CBF

Dimensions	Net (mm/in)	Shipping (mm/in)
Width	532 / 21	610 / 24
Depth	766 / 30	860 / 34
Height	977 / 39	1150 / 45

Electrical	Power (kW)	Total Amps (A)	Plug
208-230/60/1	3.6	16	L6-20P

**Above specifications are subject to change without notice*

Features

Control System	Two, Digital
Refrigerated Hopper	✓
Hopper Agitator	✓
Temperature Display	✓
Standby Mode	✓
Auto Closing Dispensing Valve	✓
Dispensing Speed Control	✓
Low Mix Indicator Light & Alarm	✓
Low Temperature Protection	✓
Motor Overload Protection	✓
High Pressure Protection	✓
Defrost & Quick Freeze	✓
Soft Start	✓

Available Options

Water Cooled	✓
Top Air Discharge Chute	✓
Cart (Trolley)	✓